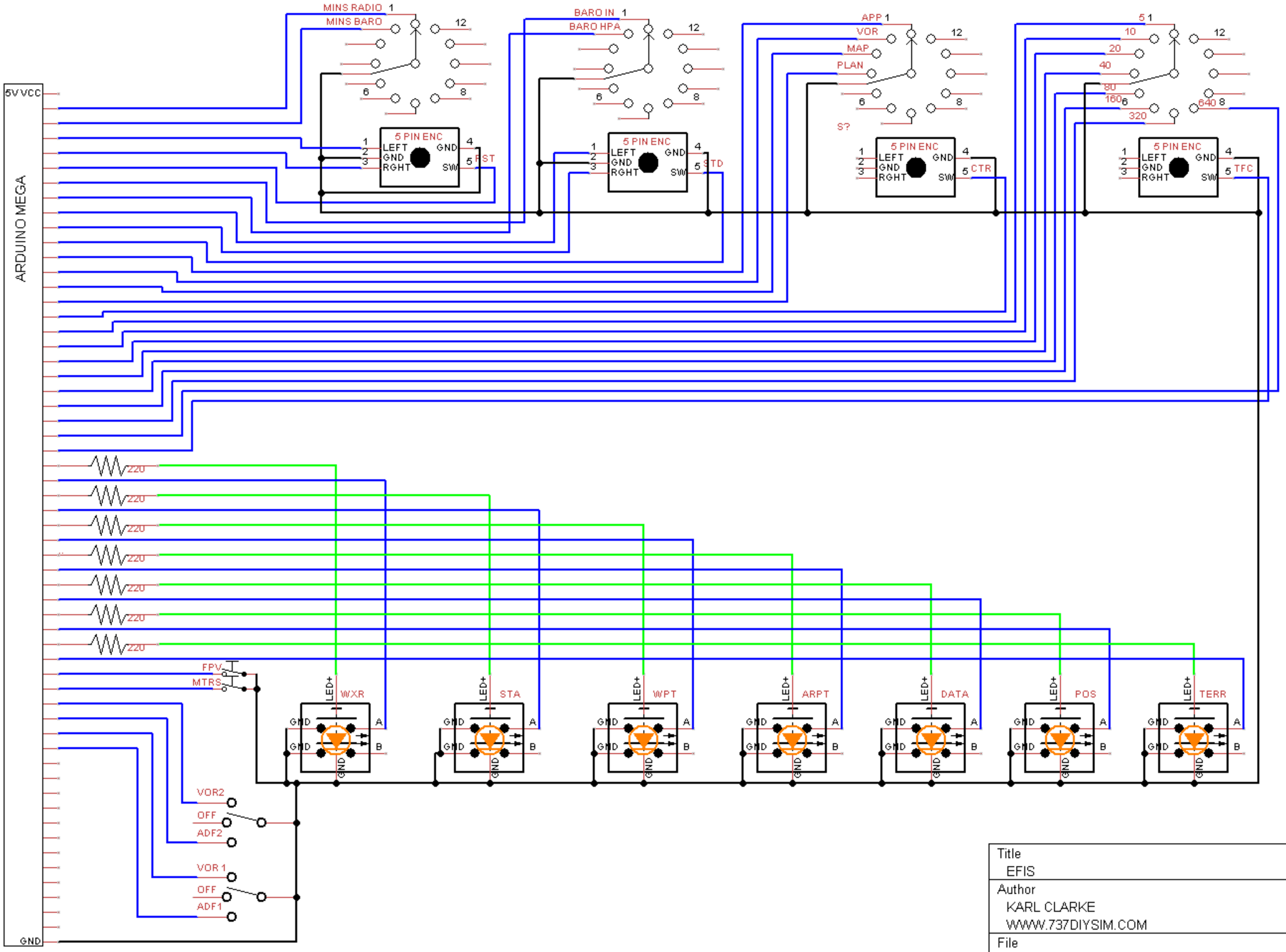

Title EFIS		
Author KARL CLARKE WWW.737DIYSIM.COM		
File C:\Users\karlc\OneDrive\Website\ ... EFIS.dsn		Document WD
Revision 1.0	Date 21/06/2020	Sheets 1 of 1