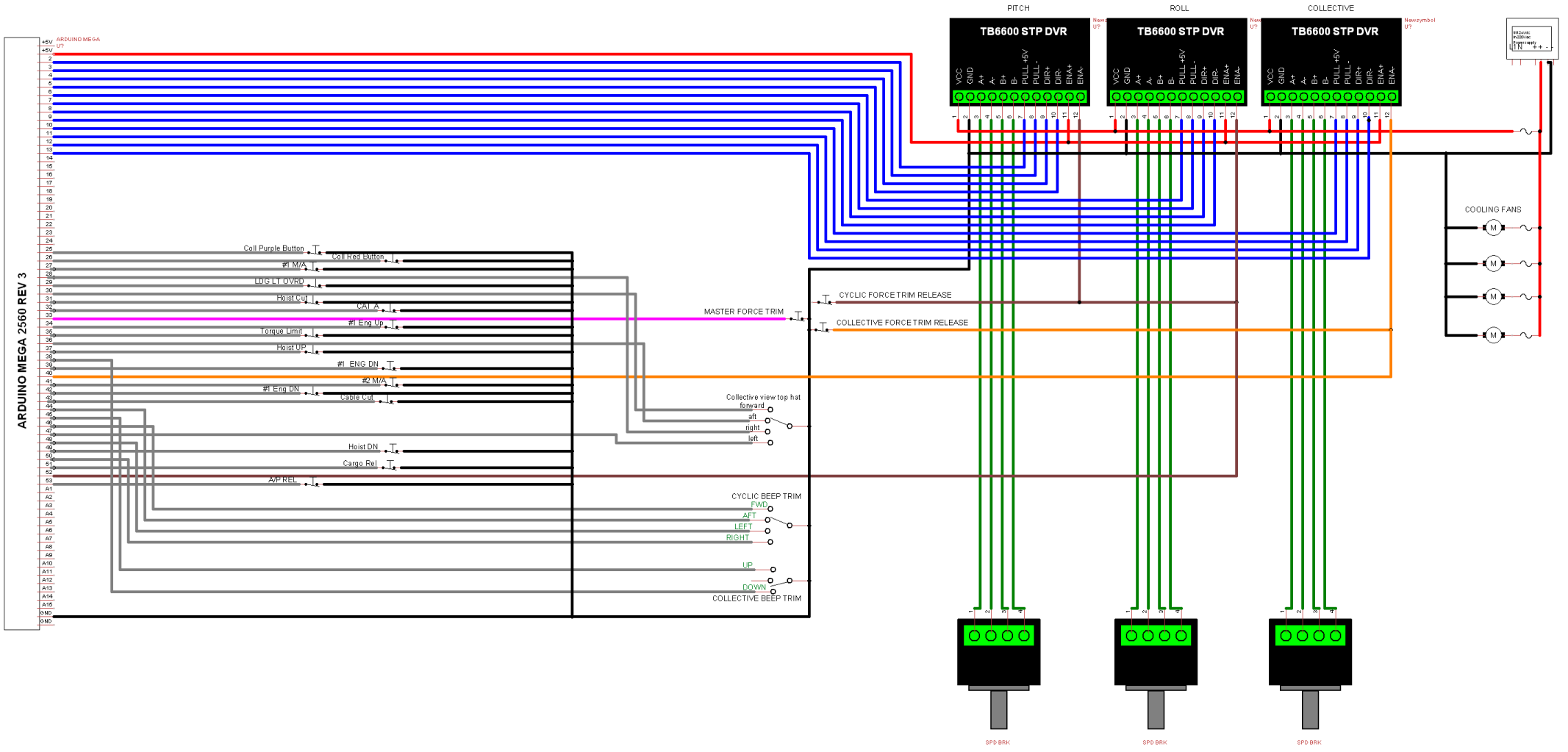


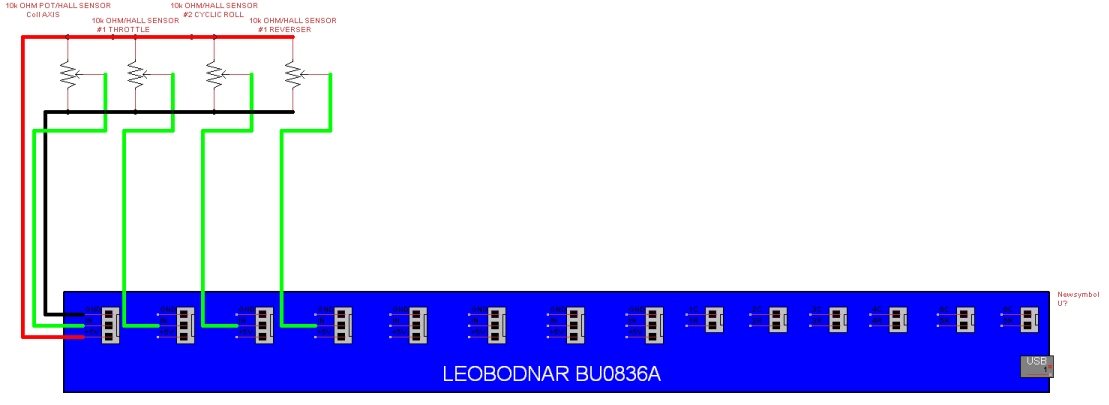


| | |
|---|---|
| Title | COLL & CYCLIC WD |
| Author | KARL CLARKE<br>WWW.737DIYSIM.COM |
| File | E:\OneDrive\Website\TINYCAD\CYC-COLL.dsn |
| Document | WD |
| Revision | 1.0 |
| Date | 01/09/2021 |
| Sheets | 3 |