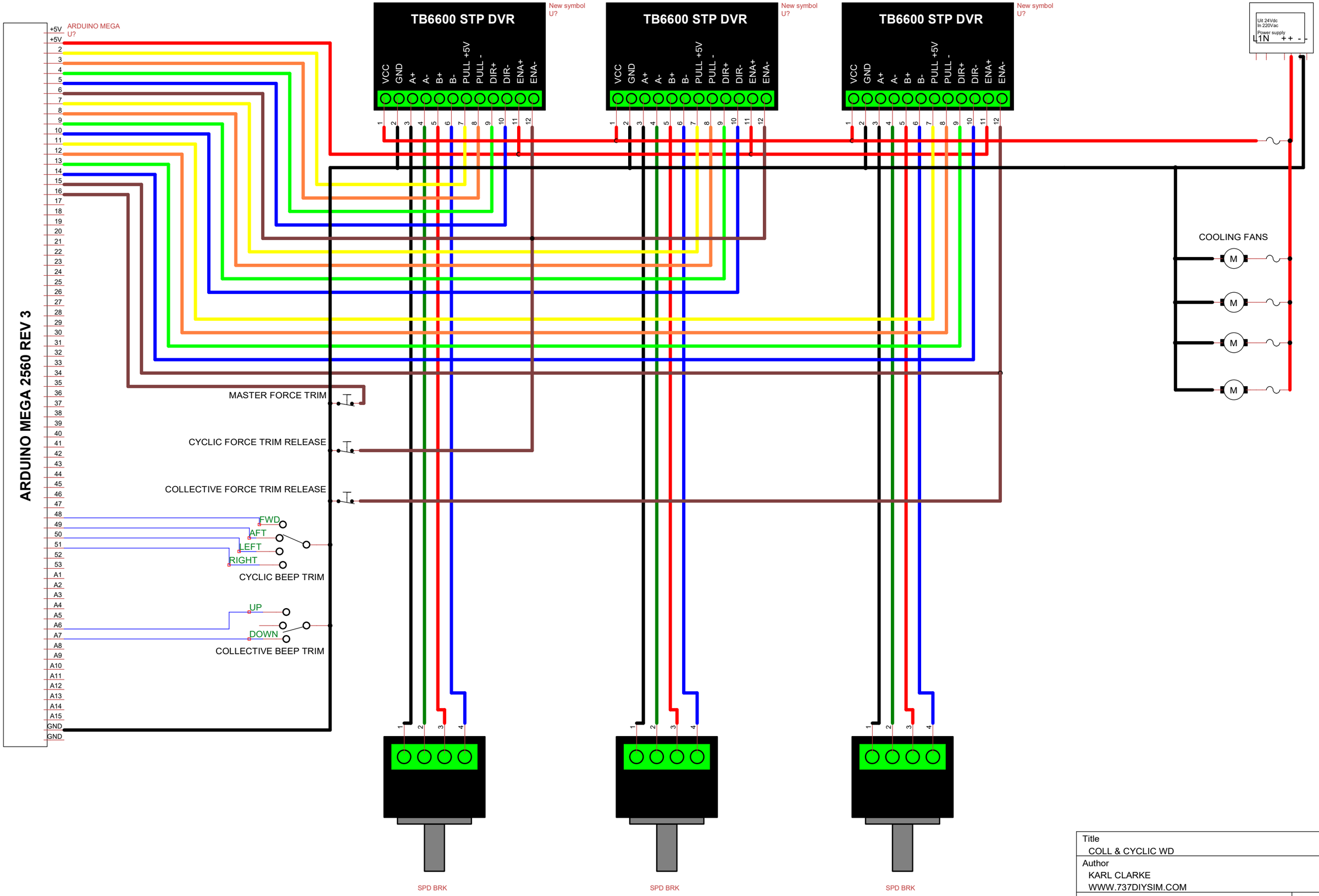

Title COLL & CYCLIC WD		
Author KARL CLARKE WWW.737DIYSIM.COM		
File Users\737DIYSIM\OneDrive\ ... CYC-COLL.dsn		Document WD
Revision 1.0	Date 01/09/2021	Sheets 3